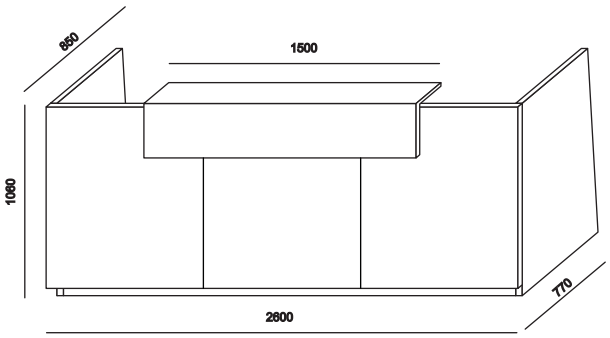
850
1500
1060
770
2600

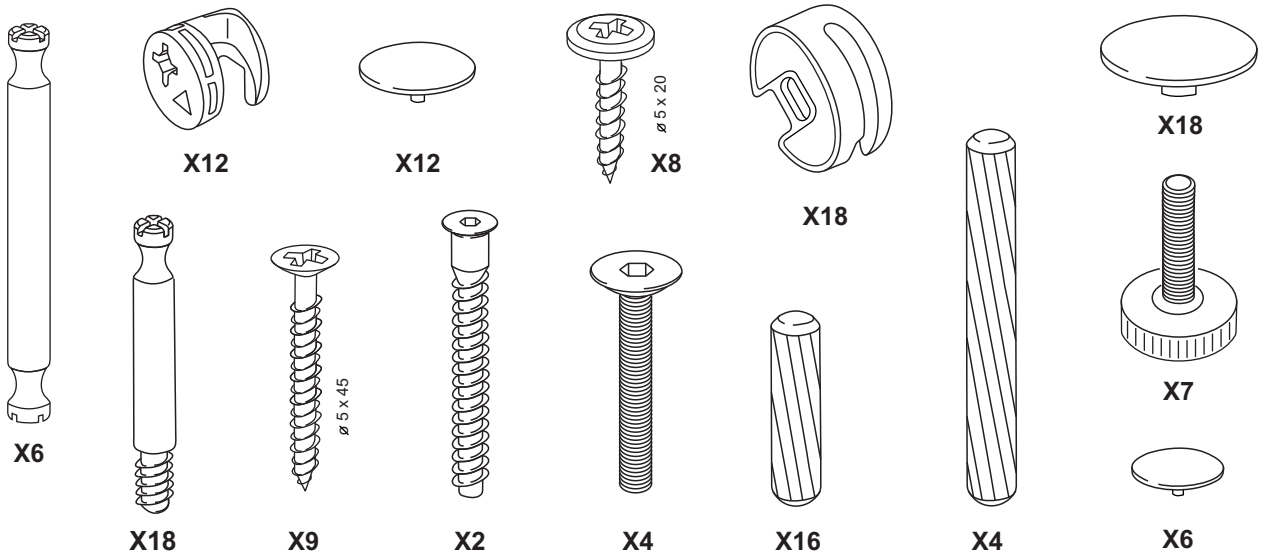
X6
X12
X12
ø 5 x 20
X8
X18
X18
X7
X6
X18
ø 5 x 45
X9
X2
X4
X16
X4

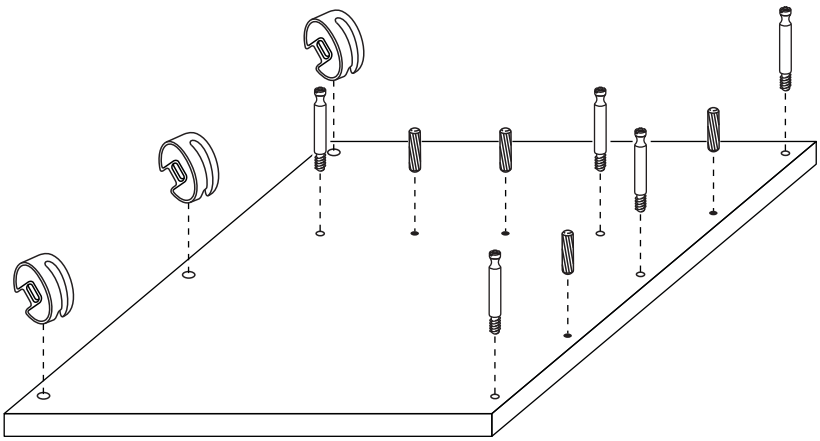

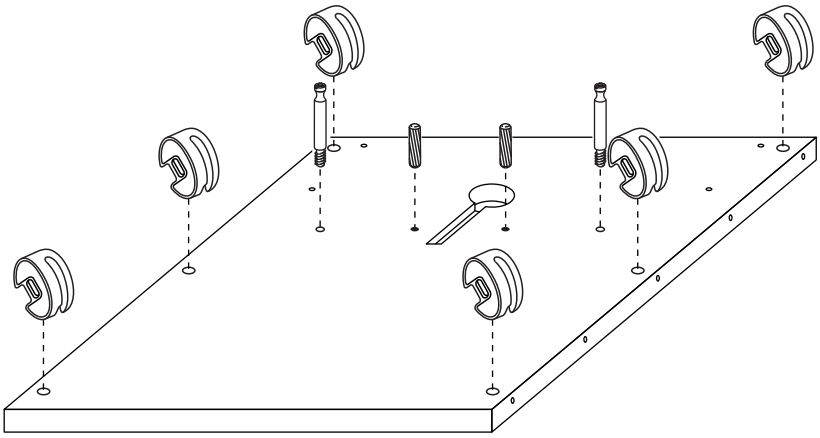

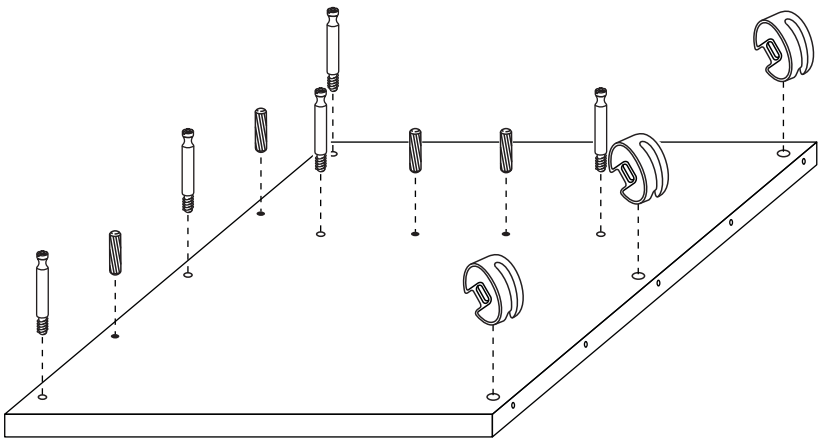

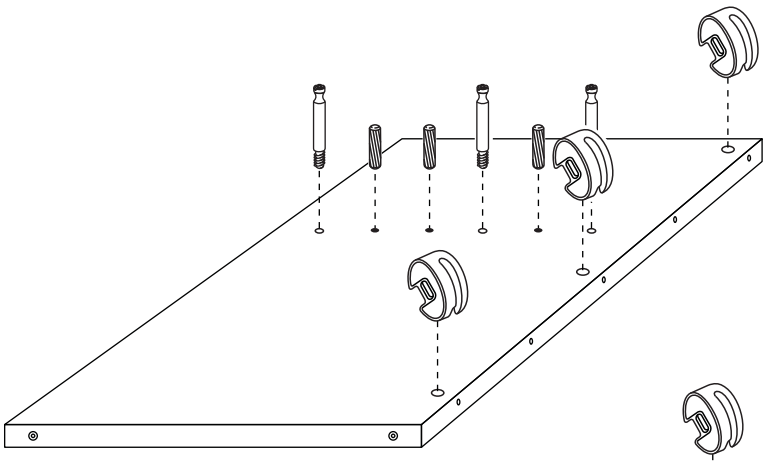

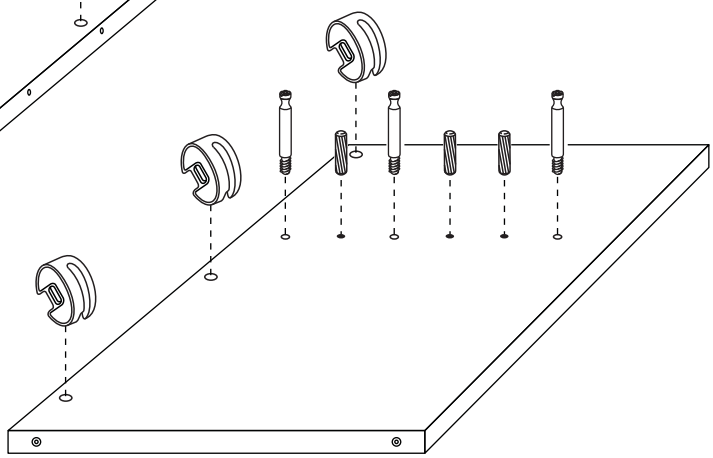

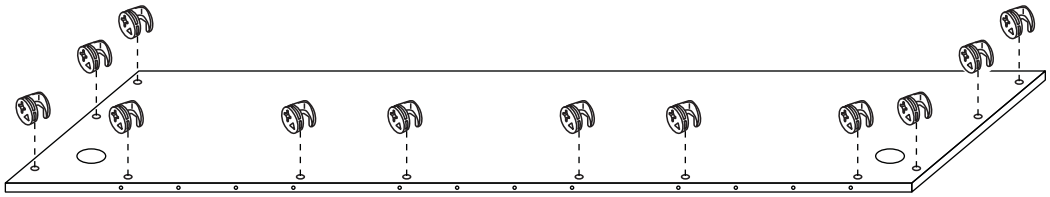

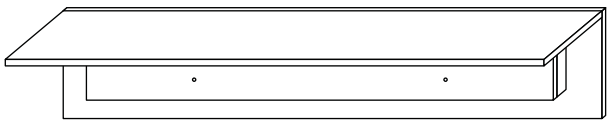

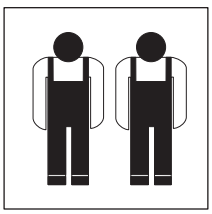

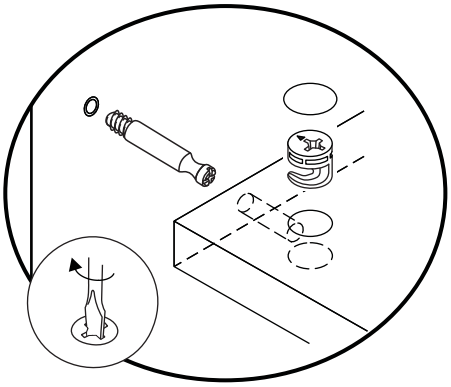

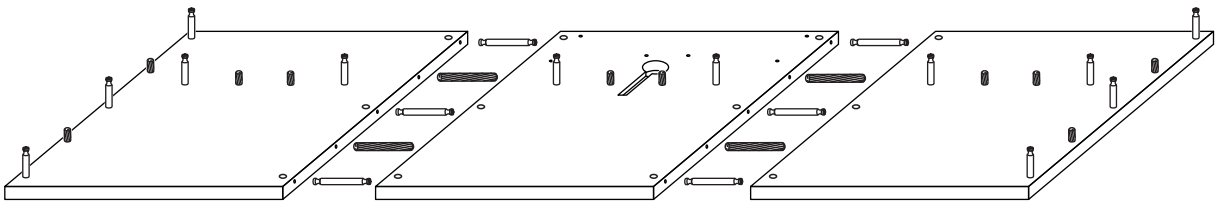

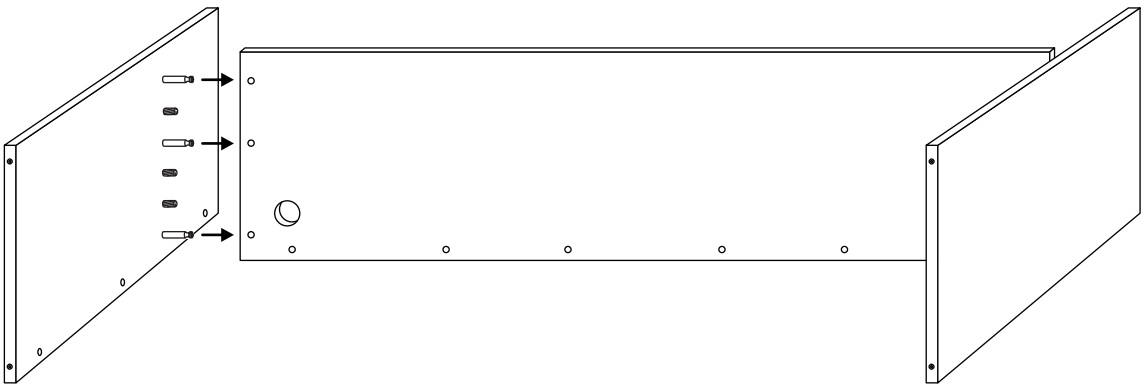

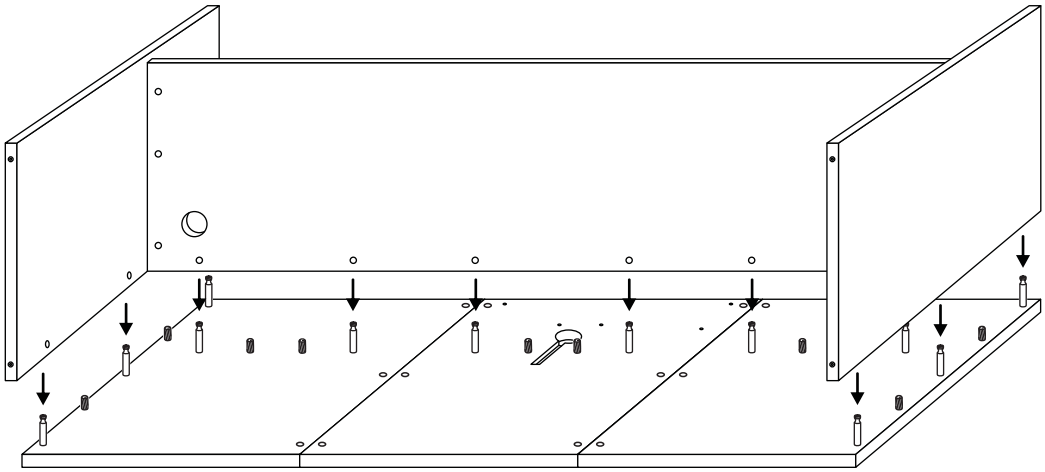

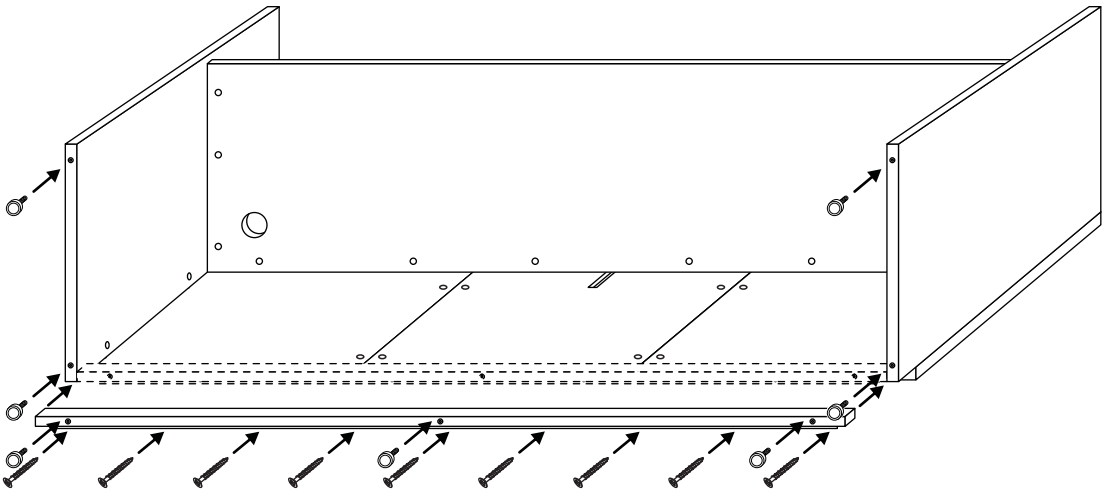

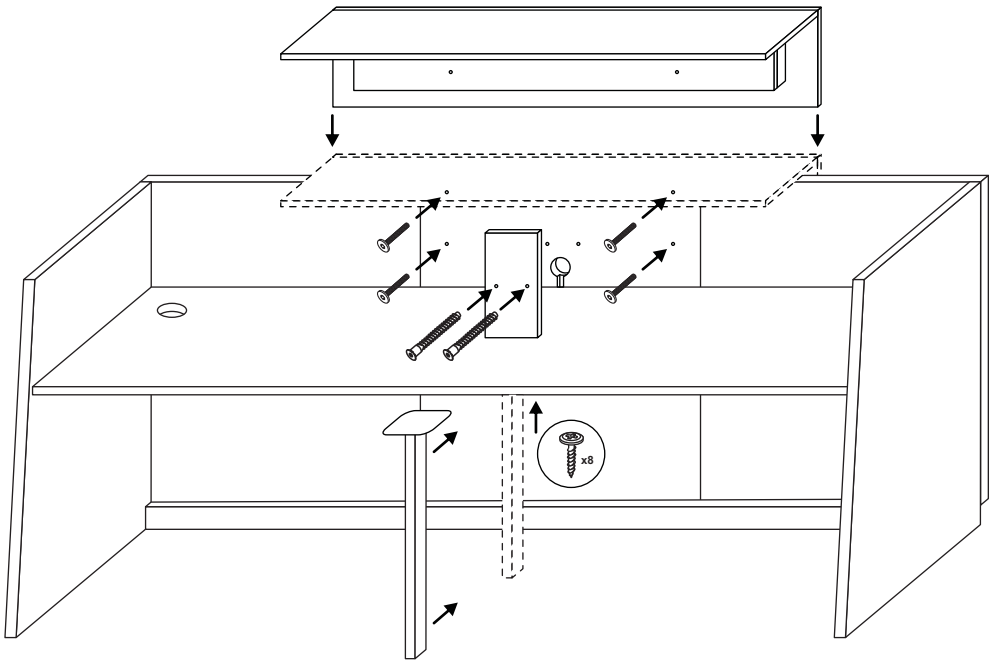
x8